INTERCOM

SMART VIDEO DOORBELL

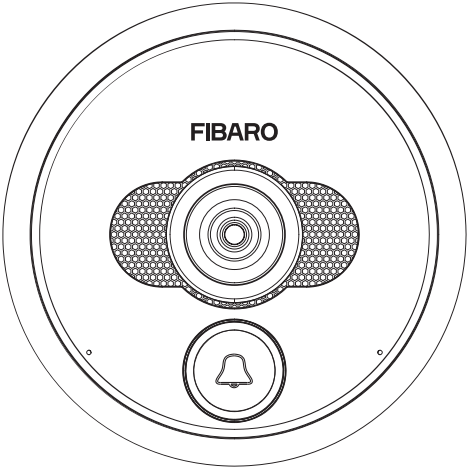

User manual for FGIC-002

Installation & Configuration Guide

FIBARO

1: Contents

1: Important safety information **4**

2: Description and features **5**
2.1: Description 5
2.2: Main features 5

3: Installation **6**
3.1: Package contents 6
3.2: Required equipment 7
3.3: Choosing location 7
3.4: Choosing and routing wires 8
3.5: Mounting the installation box 9
3.6: Mounting the in-wall part 11
3.7: Connecting wires 12
3.8: Connecting Ethernet/POE cable: 13
3.9: Connecting 12V DC power supply: 13
3.10: Connecting relays 14
3.11: Connecting tamper switch to external system 14
3.12: Mounting the on-wall part 15
3.13: Memory card as local storage 16

4: First time configuration **17**
4.1: Requirements 17
4.2: Logging in 18
4.3: Creating home 18
4.4: Network configuration 19
4.5: User configuration 20

5: Operating the device **21**
5.1: Opening the gate 21
5.2: Making a call 22
5.3: Inviting new user 22
5.4: Resetting to factory settings 23
5.5: Visual indications 23
5.6: Adding trusted device 24
5.7: Adding another Intercom 24

6: Use cases **25**
6.1: Opening the gate with electromagnetic lock through the app 25
6.2: Opening the gate through the wall switch at your home or near the exit 25
6.3: Connecting external alarm device 26
6.4: One switch for opening the wicket, another one for opening the gate 26

7: Specification **27**

8: Regulations **28**

9: Warranty terms and conditions **29**

2: Important safety information

Read this manual before attempting to install the device!

Failure to observe recommendations included in this manual may be dangerous or cause a violation of the law. The manufacturer, Fibar Group S.A. will not be held responsible for any loss or damage resulting from not following the instructions of operating manual.
The manufacturer is not responsible for any accidents related to theft, damage or breaching of the wiring, performed by an unauthorized person.
The device is not designed to protect the owner's property. It is recommended to use a professional alarm system for such solution.
Make sure that local law does not prohibit to record, store, and edit the video without the consent of people being recorded.

Danger of electrocution!

It is strongly prohibited to connect any of the device terminals to mains (110V/230V) voltage! It is designed to be powered with low voltage power supply. Connecting to the mains power will result in damaging the device and will void the warranty.
To be installed only by a qualified specialist! Performing the installation or maintenance on your own may void the warranty.

Caution HOT!

Inside the operating device there are elements that may cause burns. The device may be demounted at least 30 minutes after disconnecting the power supply. We recommend to still watch for elements marked as "Caution hot".

Do not modify this device in any way not included in this manual.
This product is not a toy. Keep away from children and animals!

Please note that the usage of cellular data may cause additional charge.

3: Description and features

3.1: Description

FIBARO Intercom can show you everyone who has arrived at your doorstep with a 180-degree high-definition view and night vision.
This modern-looking, high-gloss device can be placed near the front door or gate to look after your safety.
The Intercom allows to control two gates, which might be opened using assigned PIN codes on rotating ring, holding up a phone towards the device or using dedicated app to do it remotely.
The recordings can be stored on a SD card.

3.2: Main features

- Rotating ring used for PIN codes,
- Two relay outputs (to control gates),
- Full HD video resolution (up to 1080p/30fps),
- Ultra-wide angle lens (up to 180°),
- IR illumination (for night view),
- Noise-cancelling microphones,
- Speaker,
- Proximity sensor.

4: Installation

Before installing the device:

1) Check if the package content is complete,
2) Prepare all the required equipment,
3) Make sure the power is off.

4.1: Package contents

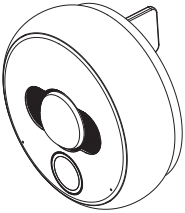

On-wall part

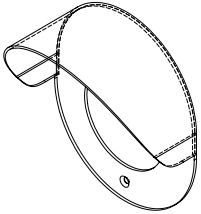

Protective canopy

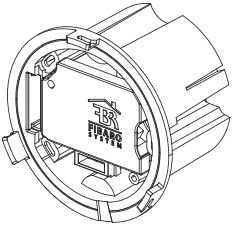

In-wall part

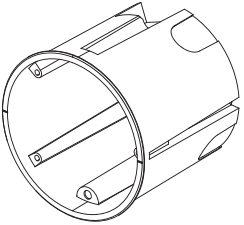

Installation box

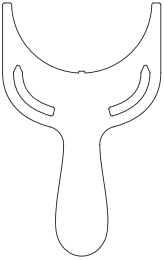

Tightening tool

2.2mm x 12mm

M2 x 8mm
DIN913 hex

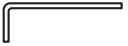

Hex key 0.9mm

4.2: Required equipment

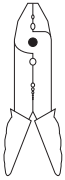

Wire stripper

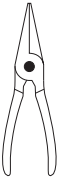

Needle-nose pliers or Tweezers

PH0 and PH1 Philips Screwdrivers

Remember that other professional equipment for mounting the installation box depends on the type of construction material.

4.3: Choosing location

The device is rated at IP 54, which means it is protected against water splashed from all directions. To increase the resistance to changing weather conditions, it is recommended to place the device under a roof.

Do not install the device in places exposed to direct sunlight!
If this happens, try to shade the device to avoid overheating and to keep the sun off the lens and reduce flare. Long-term operating in direct sunlight may cause overheating of the device, its malfunctioning, and a significant temperature rise of a housing above the limit of safe operation for the user.

If not using the Ethernet cable, place it within a strong WiFi signal.

Recommended height of installation: 160 cm

4.4: Choosing and routing wires

The device may be powered in two ways:

1) **Power supply** 12V DC (+/- 10%) 1A LPS (not included)
2) **PoE** (Power over Ethernet) PSE 48V

Both powering modes work in parallel and may be connected at the same time with no effect on the device operation.

The device may be connected to network in two different ways:

1) **Ethernet** - wired connection (recommended)
2) **Wi-Fi** - wireless connection

i Wired connection is recommended, but if you decided to use Wi-Fi connection make sure that the device will be in range of your router and have a good quality connection.

Before routing the wires make sure what you want to connect and how many wires you will need:

1) **Power supply 12V DC** – used to power the device with external power supply. Wires required: 2
2) **Ethernet** – used for communication with the device and can be also used to power it using PoE Power over Ethernet.
   Wires required: 1 twisted pair cable with 8 wires
3) **Built-in relays** – can be used to open 2 gates or doors with an electric lock (via app, BLE proximity function, PIN code or physical buttons).
   Wires required: 2 wires per one gate/door
4) **Two buttons for built-in relays** – can be used to control built-in relay using physical buttons, switches etc.
   Wires required: 1 wire per one button and 1 wire for common ground
5) **Tamper** – can be connected to an external system to alarm it in case of sabotage attempt.
   Wires required: 2

When routing wires take into consideration the following remarks:

- The installation wires of the unit must be lead separately from the mains power wires to prevent the transmission interference and overvoltage on the control lines.
- Wires inside the installation boxes should be as short as possible to prevent curling the wires and allow for easy assembling of the in-wall part.
- Installation wires should be carried securely and not visible from the outside, preventing from the interference by unauthorized person.
- Recommended Ethernet cable for network connection is a twisted pair cable CAT-5e. The maximum cable length is 100 meters.
- Other inputs should be connected using the solid-core wires with cross-section from 0.14 to 0.34 mm2 (26…22 AWG). Connectors are also capable of connecting stranded wires.
- Close vicinity of mains (110V/230V) electrical wires may cause deterioration of the transmission through the Internet and potential noise on the inputs.

4.5: Mounting the installation box

Before installation pay attention to:

- Installation box must be mounted using the materials which will not cause the tension that could deform the shape of a box after the installation (e.g. by expanding).
- Mounting in the drywall requires using screws with hooks (not included).
- Mounting in the insulation-filled wall (e.g. drywall with mineral wool) requires to keep at least 10cm distance from the insulation to prevent the device from overheating.
- It is recommended to use the plasterboard adhesive (type T) to securely install the box.

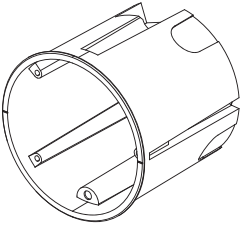

Installation box

To install the box:

1) Prepare hole for 65mm x 75mm (diameter x depth) installation box.
2) Route cables to the back of the hole (see "Choosing and routing wires").

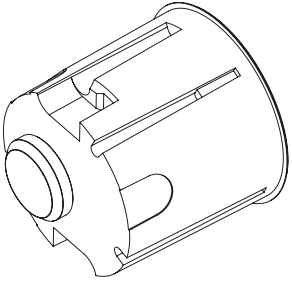

3) Drag the cables through the rubber sealing on the back of the box, taking care to keep the tightness.

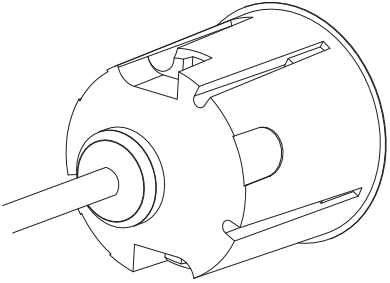

4) Mount the box in the hole and align it so the TOP arrow points up.

5) Make sure the box is flush with the wall and firmly attached.

4.6: Mounting the in-wall part

To install the in-wall part:

1) Use a screwdriver to unscrew the small screw that secures the masking cap

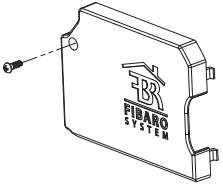

labelled with FIBARO logo.

2) Drag the wires through the hole located

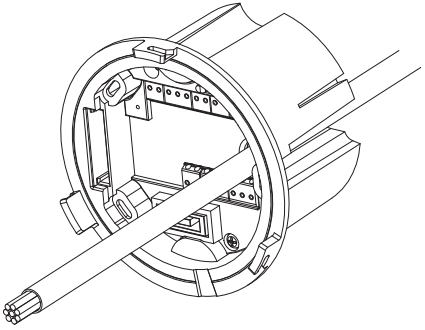

on the right of the in-wall part.

3) Place the in-wall part of the device inside the installation box.
4) Using three attached screws fasten the part with the box, make sure it is aligns properly and adjoins the wall.

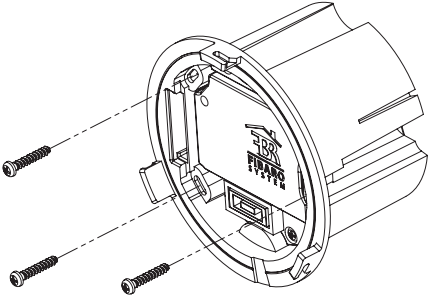

4.7: Connecting wires

To connect the wires:

1) Make sure that no wires are powered.
2) Remove the outer insulation to expose about 5 cm of the insulated inner wires, taking care not to damage them.

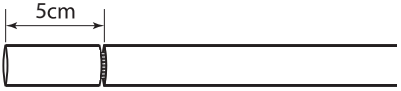

3) Separate and straighten the inner wires if twisted.
4) Cut the inner wires to 4 cm in length.

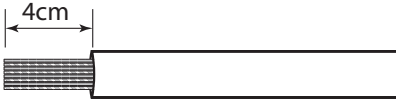

5) Remove the insulation from the inner wires to leave about 5 mm of exposed metal core on each wire.

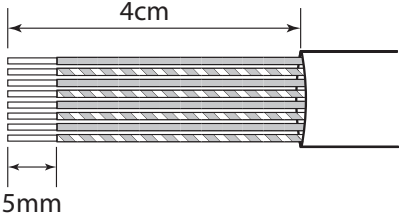

6) Put the wires inside the terminals using long-nose pliers or tweezers according to diagrams below.

i Make sure all wires are firmly attached. Should you need to remove a wire from the connector we recommend to use a dedicated tool - WAGO 2059-189 (not included, shown below) to minimize the risk of connectors damage.

4.8: Connecting ethernet/POE cable:

ETH1-ETH8 inputs are related to specified numbers of wires in RJ-45 connector according to the T-568B standard as shown below:

1) White Orange
2) Orange
3) White Green
4) Blue
5) White Blue
6) Green
7) White Brown
8) Brown

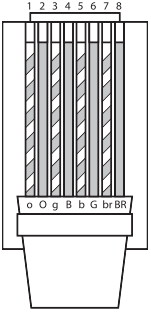

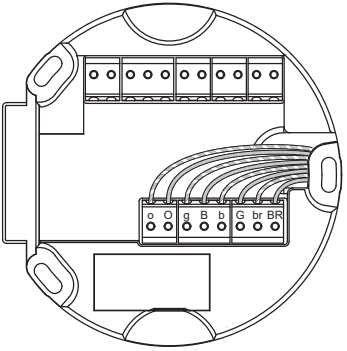

4.9: Connecting 12V DC power supply:

Inputs for connecting an external 12V DC power supply. Please double-check the polarity of power supply.

Before connecting the power supply, or attaching the wires to device terminals, make sure that the power supply and installation complies with the limits of current and voltage.

Use only Class II or double insulated power supplies and peripheral devices which provide operating in SELV (Safety Extra Low Voltage) circuits.

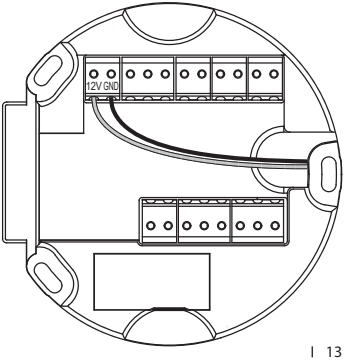

4.10: Connecting relays

Configurable relay outputs 30V/1A

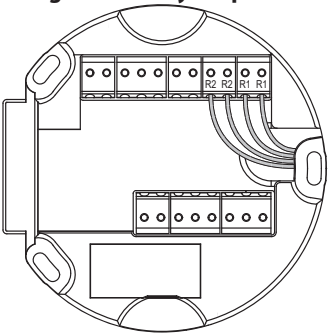

Outputs are not designed for long-term supplying of external devices. Contacts are not connected to the ground and can be connected with any polarity.

Connecting buttons for relays

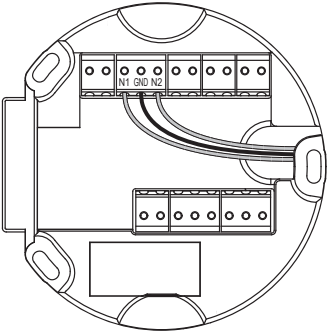

Configurable dry contact logic inputs designed to be operated by reed sensors, switches, and relay outputs.

4.11: Connecting tamper switch to external system

Anti-sabotage input, used for connecting to the external alarm system. Normally opened contacts close after installing the external, on-wall part of the device. Contacts are not connected to the ground and can be connected with any polarity.

Parameters: max. 12VDC/50mA.

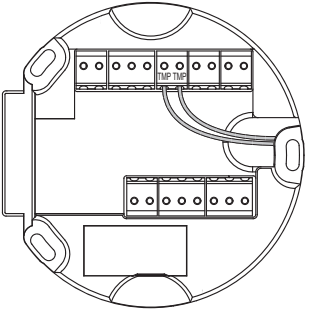

i To find more information about potential use cases of each type of connection see "Use cases" on page 25.

4.12: Mounting the on-wall part

To mount the on-wall part:

1) Install the masking cap and tighten it with a screw.
2) At this moment you can install a SD card (see "SD Card" for more information).
3) Insert the on-wall part (metal flat plate should be on the left) and align it without using excessive force.
4) While holding the on-wall part, turn the inner black ring counter-clockwise using the included tightening tool until you feel resistance.

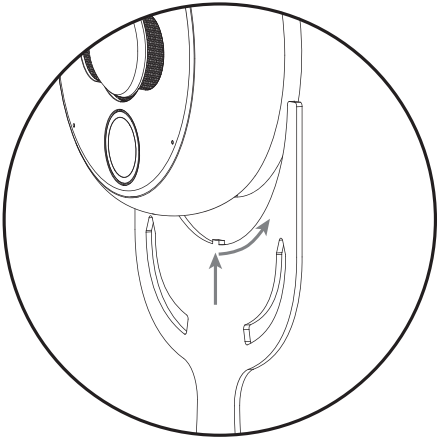

5) Using the included hex key, tighten the small hex screw until it flushes with the black ring (look at the picture on the right). Be careful not to cause its deformation.

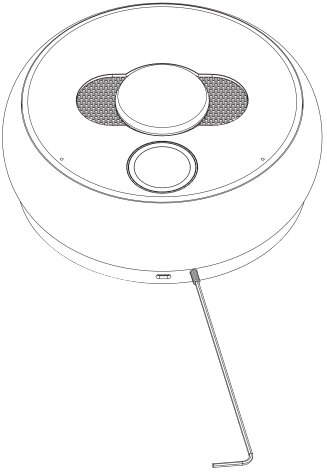

6) The device is ready to work. You can turn on the mains power and move to device configuration guide.

If you install the device when the humidity is increased, the lens cover may temporarily fog up (the fog should disappear within 12 hours of installation).

4.13: Memory card as local storage

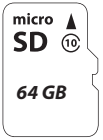

The device allows for installing the microSD Card for local storage of recordings.
FIBARO Intercom supports up to 64 GB microSDHC and microSDXC cards, Class 10 is recommended. As for recording time, please check the chart below.

Inserting a memory card:

1) Before inserting the microSD Card, please ensure the direction is correct, otherwise the card and card slot may be damaged!
2) Open the plastic cover located behind the ring.
3) Use your finger to pull forward the latch that keeps the SD card in place.
4) Lift the latch up.
5) Place the SD card into the slot with the label side facing up and the gold contacts toward the slot.
6) Close the latch and pull it back until you feel a click.
7) Close the plastic cover.

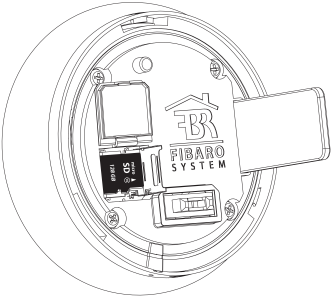

Memory card capacity chart

Resolution \ Storage	8 GB	16 GB	32 GB	64 GB
1080p (1920 x 1080)	10h	19h	39h	77h
720p (1280 x 720)	17h	35h	69h	139h
576p (720 x 576)	25h	50h	99h	198h
288p (352 x 288)	69h	139h	278h	555h

5: First time configuration

Please check out our online guides for FIBARO Intercom.

5.1: Requirements

To configure FIBARO Intercom you need:

- iOS or Android mobile device connected to the Wi-Fi,
- FIBARO Intercom App,
- FIBARO ID account (which you can set up during the configuration process).

i Make sure that during the configuration of FIBARO Intercom your smartphone is connected to the same network as your device.

i During the setup be close to the device.

i Your network should be connected to the Internet at least for the configuration time.

Download FIBARO Intercom app from the App Store or the Google Play Store

iPhone / iPad (iOS)

Android smartphone

5.2: Logging in

Having a valid FIBARO ID account is necessary to use your device. Such account may be created through the same app that is designed to work with the Intercom. Look below and follow one of the procedures.

Without existing FIBARO ID account:

1) Launch the downloaded FIBARO Intercom app.
2) Type in your e-mail address.
3) Set a password to be used for your FIBARO ID account.
4) Read the Terms of Service and Privacy Policy.
5) Verify your e-mail address by clicking a link provided in the message.
6) After creating an account, move to Creating home.

With existing FIBARO ID account:

1) Launch the downloaded FIBARO Intercom app.
2) Log in to your FIBARO ID account.
3) After successful login, you go directly to Creating home.

5.3: Creating home

In this step, it is possible to create a new home or login to existing one.

> i Configuration takes place through BLE (Bluetooth Low Energy) protocol. Make sure that Bluetooth is enabled on your smartphone.

Create new home:

1) Create a home and name it.
2) Tap Next.
3) Choose your Intercom from the list of found devices.
4) Name the device.
5) Tap Next to move to the network configuration.

> i If you log in to existing home, just select it from the list and proceed to the next step.

5.4: Network configuration

After selecting your Intercom from the list, you can establish a network connection.
You can do this in three ways: via Wi-Fi, LAN (auto), LAN (manual).

Wi-Fi connection

Make sure that the range of Wi-Fi signal is good enough. If the Intercom is located far from Wi-Fi router, it is strongly recommended to use Wi-Fi signal expanders nearby the Intercom.

1) Select Connecting via Wi-Fi.
2) Choose your Wi-Fi network from the list.
3) You can choose the network from the list or set it up manually.

i The list shows Wi-Fi networks in Intercom range. It is not a list of networks found by your phone.

4) Provide a password to the network.
5) It is also possible to set up Wi-Fi connection manually. Provide credentials of your network.

Automatic LAN connection

1) Wait for the device to connect (via DHCP).
2) Successful connection takes you to the user configuration.

Manual LAN connection

1) Provide necessary details, such as: IP Address, Subnet mask, Gateway, and DNS.
2) After that proceed to the user configuration

i After successful configuration of the device (resulting in streaming the live view from the Intercom) it is strongly recommended to assign a fixed IP address of the device in your router. It makes the device integration easier.

i If the connection with the device is not successful, it may be necessary to reset your device to factory settings. Reset procedure is described in “Resetting to factory settings” chapter.

5.5: User configuration

To configure a new user:

1) Type in your name in provided form and tap Next.
2) Set your photo. You can choose it from the library or use camera.
3) Set up your PIN Code to be used for opening the gate.
4) Set your password for local access.
5) The following summary will be displayed:

- **Intercom name** - given name of a device
- **User name** - name of the main user
- **PIN Code** - protection code set during configuration
- **Local password** - user password for local access
- **Network** - connection mode and name of network

6) Verify user information and tap Finish.

User roles

There are three user roles available in FIBARO Intercom interface:

- **Administrator** - can configure home, add and change settings of devices and add or invite users. The administrator can fully utilize the system (calling, opening the gate, history of actions).
- **System user** - can use the device (calling, opening the gate, history of actions) and manage account's settings (set and change name, photo, and PIN).
- **PIN user** - can only open the gate through account's PIN.

i User configuration is necessary every time the first device is configured at home.

i User configured in this step becomes administrator of the system.

i Local password is obligatory when you use device in network without Internet access, stream camera image and you want to integrate it with FIBARO Home Center, or to log in to web interface.

6: Operating the device

6.1: Opening the gate

FIBARO Intercom allows to use rotating ring for entering PIN Codes set during the configuration process.
Correctly entered PIN code may result in authenticating the user and opening the gate. Anyone who does not have a PIN code may use the button on the front to make a call.

To open the gate using the ring:

1) Move your hand close to the device - the button will light up in blue.
2) Rotate the ring to select the first digit of your PIN code - numbers will light up one by one.
3) Push the ring to confirm selected digit.
4) Correct entering of the digit will be confirmed by turning off the backlight.
5) Enter next digits of your PIN code in the same way. If you entered incorrect digit, pull the ring to cancel the entire sequence and start again from the 1st digit.
6) After selecting the last, 4th digit, make a single push to open the gate connected to the first relay (R1).
7) Make a double push to open the gate connected to the second relay (R2).
8) The PIN code will be verified. In case of successful verification, all diodes will blink green five times and the gate will be opened.
9) Entering incorrect PIN code will be indicated by two blinks in red.

i The default time for which the gate stays opened is 3 seconds. Its length may be adjusted by the admin through the mobile app.

i The gate may be opened by using the Bluetooth low energy proximity sensor. In order to do so, move your paired smartphone with enabled Bluetooth connection close to the device.

6.2: Making a call

FIBARO Intercom allows two-way communication.

To make a call:

1) Move your hand close to the device - the button will light up in blue.
2) Press the button.
3) LED diodes will start flashing - wait for a call.
4) If no one responds to your call, you will be able to leave your message in the voice mail.

Voice mail functionality:

- Enabling the voice mail is indicated by the red button backlight, numbers flashing in red, and a beep.
- Maximum length of the voice message is 30 seconds.

6.3: Inviting new user

To invite new users:

1) Go to Settings.
2) Find Users section.
3) Tap Invite User button.
4) Fill the FIBARO ID user's e-mail address in the form.
5) After sending an invitation, new user will be visible on the list.

i You can only invite active FIBARO ID users.

On invited user's behalf:

1) Install FIBARO Intercom App and log in to the FIBARO ID account (the same that the invitation was sent to).
2) After logging in you can see a Home list and the one that user is invited to will be marked.
3) After choosing a home, the next step is User Configuration.

i Invited user's permissions is system user by default.

6.4: Resetting to factory settings

There are two ways of performing the reset of the device: through the mobile app or directly using the device. After completion, the Intercom will be restored to factory settings. Please notice that all stored recordings will also be removed!

To reset the device through mobile app:

1) Open the app.
2) Go to Settings.
3) Select your device.
4) Find Status and tap it.
5) Tap Reset to factory button.

To reset the device directly:

1) Press the ring, then immediately press the button and hold both for about 10 seconds.
2) Release when all numbers blink red twice and the button glows red.
3) Enter the last 8 digits of a serial number using the rotating ring. Confirm each number with a short press of the ring.
4) Entering the correct serial number will be confirmed by numbers glowing green and restarting.

6.5: Visual indications

The Intercom is equipped with a LED Illuminated dial signaling device states, modes, and errors.

When the numbers on the dial:

- **blink red alternately** - no LAN or WiFi connection
- **blink red for 2 seconds** - wrong PIN was entered
- **blink green** - the gate is opening

When the numbers on the dial and the button:

- **blink blue** - the Intercom is calling
- **blink red** - recording to voicemail started if the call is not answered

When the button:

- **illuminates blue** - the Intercom detected presence in front of the device

6.6: Adding trusted device

FIBARO Intercom can open connected relays automatically when trusted bluetooth devices gets nearby.

To add your device to the Intercom:

1) Get close to the device.
2) Open the app.
3) Go to the User Settings.
4) Tap Add Device.
5) Tap Start Pairing.
6) Select relays for access and tap Next.
7) Choose the device you want to pair with and tap Pair.
8) Calibrate the device and tap Next.
9) Tap Finish.

To learn more about the processess visit our online guide:

6.7: Adding another Intercom

In case of installation of several devices in your house, it is possible to add another device to your home.

To add another device:

1) Go to Settings.
2) Find Devices section.
3) Tap Add Device button.

The configuration of following devices should process same as setting up of the first device.

One step will be omitted - Configuration of the user.

All devices assigned to one Home should operate in the same network and must be connected in the same way (Wi-Fi or LAN).

7: Use cases

7.1: Opening the gate with electromagnetic lock through the app

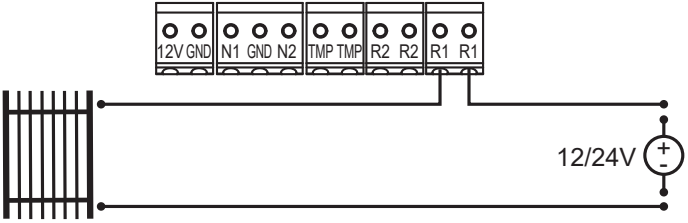

7.2: Opening the gate through the wall switch at your home or near the exit

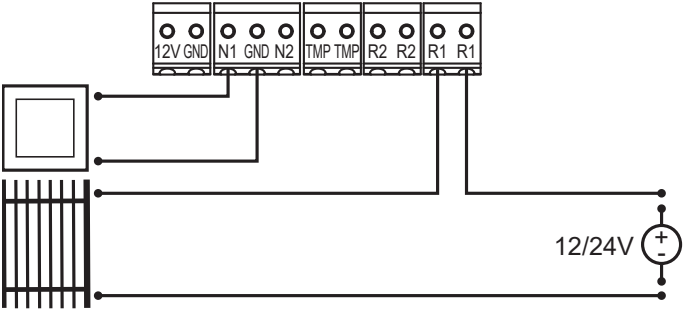

7.3: Connecting external alarm device

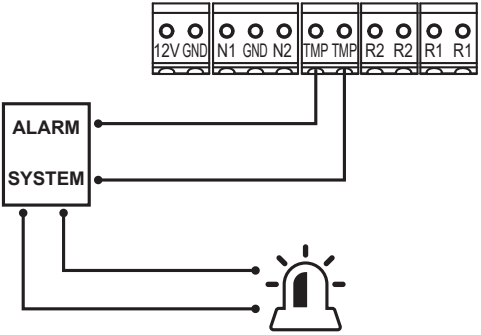

7.4: One switch for opening the wicket, another one for opening the gate

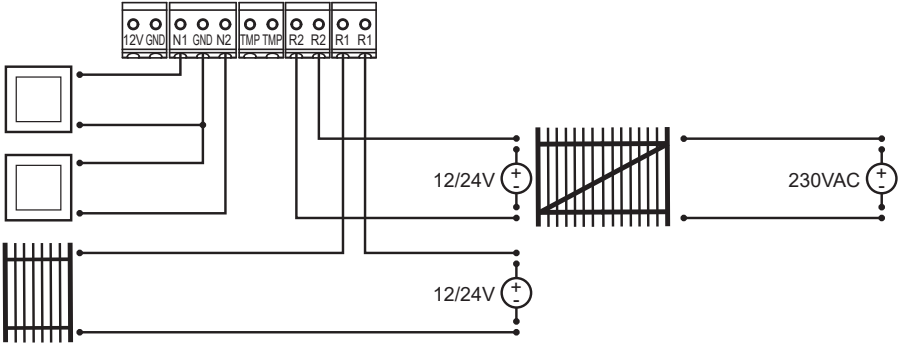

8: Specification

Power supply:	12V DC and/or 48V PoE
DC supply parameters:	12V +/- 10%, 1A LPS
PoE parameters (PSE):	36-57V, 350mA (802.3af, Class 0)
Power consumption:	up to 5W
Conductor cross-section:	0.14 ... 0.34 mm^2 (AWG 26 ... AWG 22)
Communication protocols:	Ethernet 10/100BASE-TX, Wi-Fi a/b/g/n 2.4/5GHz, Bluetooth® low energy
Radio signal power (EIRP):	+10 dBm (BLE), +20 dBm (WiFi)
Ethernet cable category:	CAT-5e
Recommended minimum Internet connection bandwidth:	5 Mbit/s upload speed 5 Mbit/s download speed
Terminals:	
N1, N2	NC, max. 5V/1mA, dry contact
TMP	NC, max. 12V DC/50mA, isolated
R1, R2	max. 30V/1A (SELV), relay
Operating temperature:	-30°C – 40°C
IP protection class:	IP54
External dimensions of on-wall part (Ø x depth):	85 x 37 mm
Installation box dimensions (Ø x depth):	65 x 75 mm
Weight:	420g

9: Regulations

Legal Notices

All information, including, but not limited to, information regarding the features, functionality, and/or other product specification are subject to change without notice. Fibar Group S.A. reserves all rights to revise or update its products, software, or documentation without any obligation to notify any individual or entity.
Fibaro and Fibar Group logo are trademarks of Fibar Group S.A.
Wi-Fi is a registered trademark of Wi-Fi Alliance.
The Bluetooth word mark is registered trademark of Bluetooth SIG, Inc.
All other brands and product names referred to herein are trademarks of their respective holders.

Warning

This product is not a toy. Keep away from children and animals!

Declaration of conformity

Hereby, Fibar Group S.A. declares that FIBARO Intercom is in compliance with the essential requirements and other relevant provisions of Directives 2014/53/EU, 2011/65/EU, and 2015/863. The full text of the EU declaration of conformity is available at the following internet address: www.manuals.fibaro.com

MPEG-4 AVC

THIS PRODUCT IS LICENSED UNDER THE AVC PATENT PORTFOLIO LICENSE FOR THE PERSONAL USE OF A CONSUMER OR OTHER USES IN WHICH IT DOES NOT RECEIVE REMUNERATION TO
(i) ENCODE VIDEO IN COMPLIANCE WITH THE AVC STANDARD (“AVC VIDEO”) AND/OR
(ii) DECODE AVC VIDEO THAT WAS ENCODED BY A CONSUMER ENGAGED IN A PERSONAL ACTIVITY AND/OR WAS OBTAINED FROM A VIDEO PROVIDER LICENSED TO PROVIDE AVC VIDEO.
NO LICENSE IS GRANTED OR SHALL BE IMPLIED FOR ANY OTHER USE. ADDITIONAL INFORMATION MAY BE OBTAINED FROM MPEG LA, L.L.C. SEE HTTP://WWW.MPEGLA.COM

WEEE Directive Compliance

Device labelled with this symbol should not be disposed with other household wastes. It shall be handed over to the applicable collection point for the recycling of waste electrical and electronic equipment.

10: Warranty terms and conditions

1. FIBAR GROUP S.A. with its registered office in Wysogotowo, ul. Serdeczna 3, 62-081 Wysogotowo, entered into the Register of Entrepreneurs of the National Court Register maintained by the District Court for Poznań-Nowe Miasto and Wilda in Poznań, VIII Commercial Division of the National Court Register (KRS) under number: 553265, NIP 7811858097, REGON: 301595664, share capital PLN 1,182,100 paid in full, other contact information is available at: www.fibaro.com (hereinafter "the Manufacturer") guarantees that the device sold (hereinafter: "the Device" is free from material and manufacturing defects.
2. The Manufacturer shall be responsible for malfunctioning of the Device resulting from physical defects inherent in the Device that cause its operation to be incompatible with the specifications within the period of:
- 24 months from the date of purchase by the consumer,
- 12 months from the date of purchase by a business customer (the consumer and business customer are further collectively referred to as "Customer").
3. The Manufacturer shall remove any defects revealed during the guarantee period, free of charge, by repairing or replacing (at the sole discretion of the Manufacturer) the defective components of the Device with new or regenerated components. The manufacturer reserves the right to replace the entire Device with a new or regenerated device. The Manufacturer shall not refund money paid for the device.
4. Under special circumstances, the Manufacturer may replace the Device with a different device most similar in technical characteristics.
5. Only the holder of a valid guaranty document shall be entitled to make claims under guarantee.
6. Before making a complaint, the Manufacturer recommends using the telephone or online support available at https://www.fibaro.com/support/.
7. In order to make a complaint, the Customer should contact the Manufacturer via the email address given at https://www.fibaro.com/support/.
8. After the complaint has been properly filed, the Customer will receive contact details for the Authorized Guarantee Service ("AGS"). The customer should contact and deliver the Device to AGS. Upon receipt of the Device, the manufacturer shall inform the Customer of the return merchandise authorization number (RMA).
9. Defects shall be removed within 30 days from the date of delivering the Device to AGS. The guarantee period shall be extended by the time in which the Device was kept by AGS.
10. The faulty device shall be provided by the Customer with complete standard equipment and documents proving its purchase.
11. The cost of transporting the Device in the territory of the Republic of Poland shall be covered by the Manufacturer. The costs of the Device transport from other countries shall be covered by the Customer. For unjustified complaints, AGS may charge the Customer with costs related to the case.
12. AGS shall not accept a complaint claim when:
- the Device was misused or the manual was not observed,
- the Device was provided by the Customer incomplete, without accessories or nameplate,
- it was determined that the fault was caused by other reasons than a material or manufacturing defect of the Device
- the guarantee document is not valid or there is no proof of purchase,
13. The guarantee shall not cover:
- mechanical damages (cracks, fractures, cuts, abrasions, physical deformations caused by impact, falling or dropping the device or other object, improper use or not observing the operating manual);
- damages resulting from external causes, e.g.: flood, storm, fire, lightning, natural disasters, earthquakes, war, civil disturbance, force majeure, unforeseen accidents, theft, water damage, liquid leakage, battery spill, weather conditions, sunlight, sand, moisture, high or low temperature, air pollution;
- damages caused by malfunctioning software, attack of a computer virus, or by failure to update the software as recommended by the Manufacturer;
- damages resulting from: surges in the power and/or telecommunication network, improper connection to the grid in a manner inconsistent with the operating manual, or from connecting other devices not recommended by the Manufacturer.
- damages caused by operating or storing the device in extremely adverse conditions, i.e. high humidity, dust, too low (freezing) or too high ambient temperature. Detailed permissible conditions for operating the Device are defined in the operating manual;
- damages caused by using accessories not recommended by the Manufacturer
- damages caused by faulty electrical installation of the Customer, including the use of incorrect fuses;
- damages caused by Customer's failure to provide maintenance and servicing activities defined in the operating manual;
- damages resulting from the use of spurious spare parts or accessories improper for given model, repairing and introducing alterations by unauthorized persons;
- defects caused by operating faulty Device or accessories.
14. The guarantee shall not cover natural wear and tear of the Device and its components listed in the operating manual and in technical documentation as such elements have a defined operational life.
15. The Device Guarantee shall not exclude, limit or suspend the Customer's warranty rights.
16. The Manufacturer shall not be liable for damages to property caused by defective device. The Guarantor shall not be liable for indirect, incidental, special, consequential or punitive damages, or for any damages, including, inter alia, loss of profits, savings, data, loss of benefits, claims by third parties and any other damages arising from or related to the use of the Device.

FIBARO

HOME INTELLIGENCE

© 2020 Fibar Group S.A.
All rights reserved
Made in Poland
www.fibaro.com